REVISIONS			
REV.	DESCRIPTION	DATE	BY
A	INITIAL DESIGN	21/10/2022	OWEN

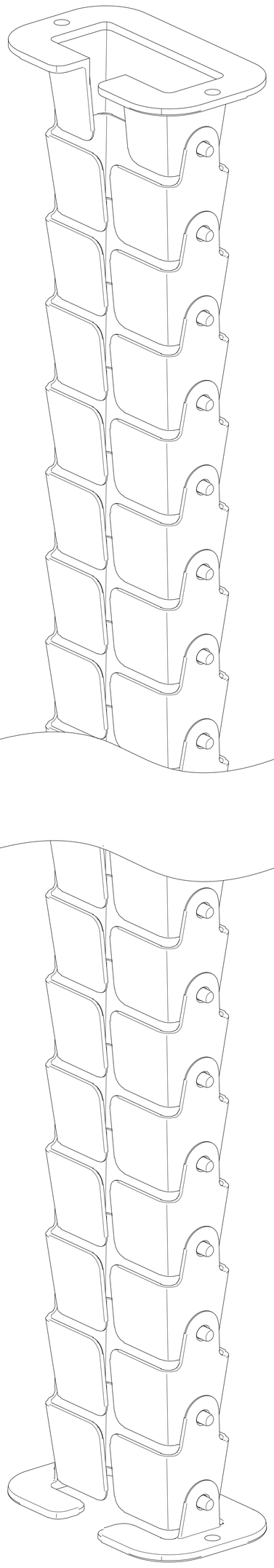

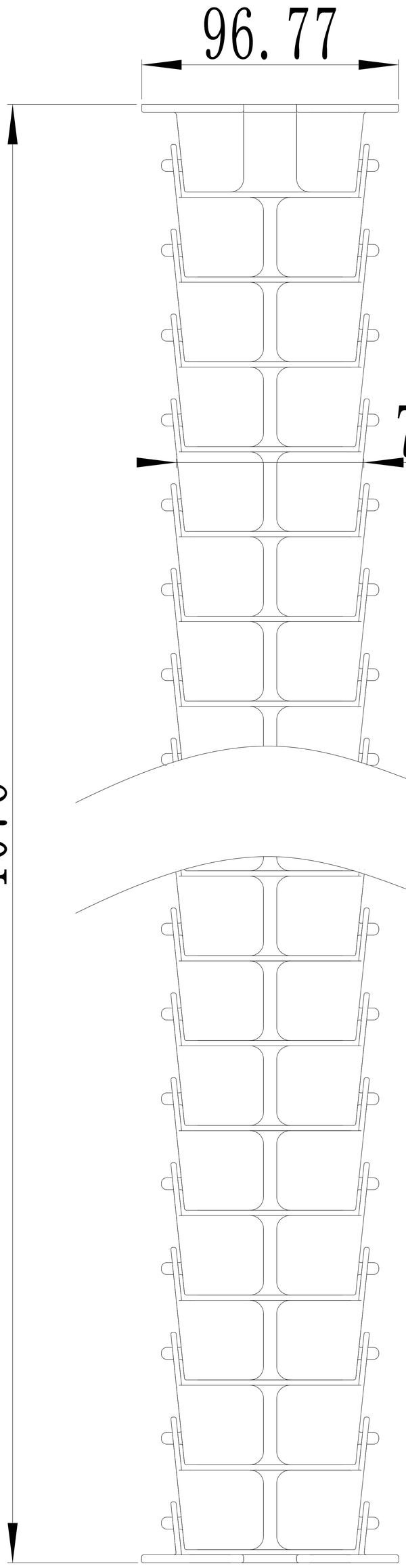

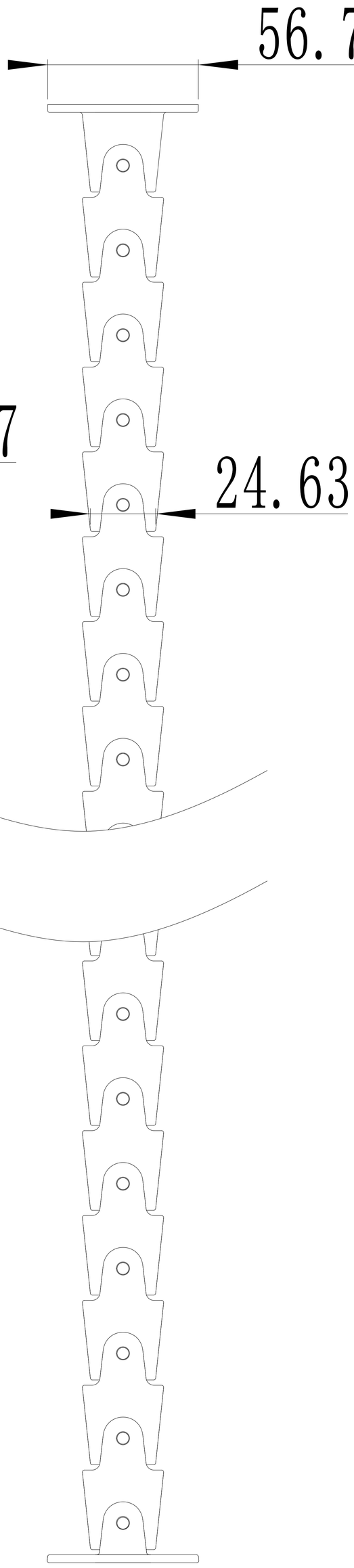

文件	江苏奥美丽实业有限公司 OMNI PART 生 产 图 纸 PRODUCTION DRAWING 核准日期：2022-10-17	受控

IF MULTIPLE TOOLS ARE USED TO MAKE PARTS,WHICH TOOL IS USED MUST BE ABLE TO BE IDENTIFIED ON THE PARTS.	UNLESS OTHERWISE SPECIFIED:		
PARTS MUST BE FREE FROM DEFECTS SCRATCHES AND MARS	DIMENSIONS ARE IN METRICS（公制） TOLERANCES(公差): FRACTIONAL（分数） ±0.38 ANGULAR:（角度） MACH ±0.25° .XX ±0.25 .XXX ±0.20 .XXXX ±0.15		
PROPRIETARY AND CONFIDENTIAL THE INFORMATION CONTAINED IN THIS DRAWING IS THE SOLE PROPERTY OF OMNI COMPANY. ANY REPRODUCTION IN PART OR AS A WHOLE WITHOUT THE WRITTEN PERMISSION OF <INSERT COMPANY NAME HERE> IS PROHIBITED.	INTERPRET GEOMETRIC TOLERANCING PER:		
	MATERIAL（材料） CRS4.0&⌀40.4圆管		
	FINISH（表面处理） POWDER PAINT		
	DO NOT SCALE DRAWING		

	NAME	DATE（日期）
DRAWN（绘图）	Owen	20/10/2022
CHECKED（审核）	刘成跃	
ENG APPR（量产审核）	刘成跃	
MFG APPR.		
Q.A.		

COMMENTS:

TITLE:

PWR-511-43″尺寸

SIZE	DWG. NO(图号).	REV（版本）
A		A

SCALE: 1:1	WEIGHT:	喷塑面积:	SHEET 1 OF 1